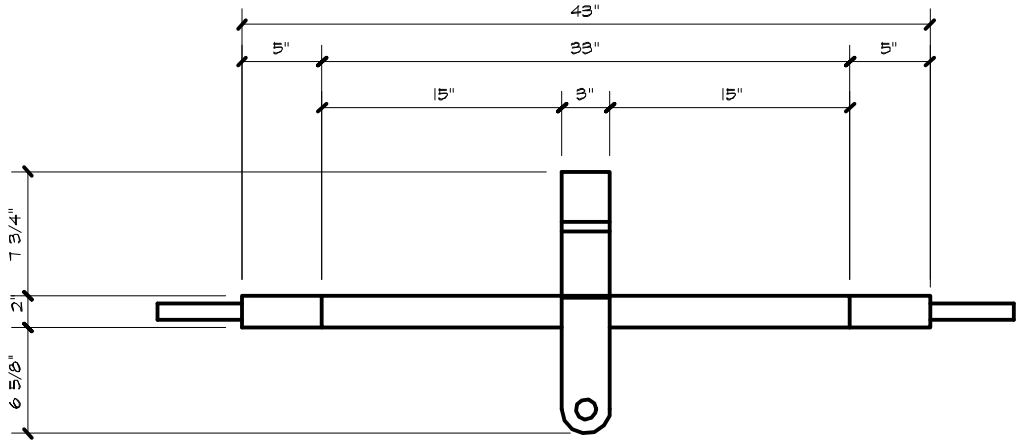

TOP VIEW

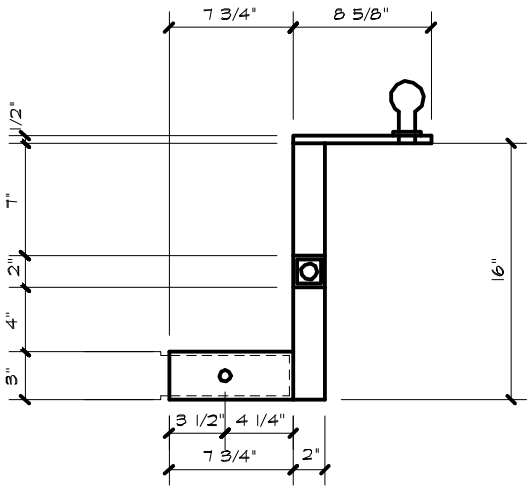

SIDE VIEW

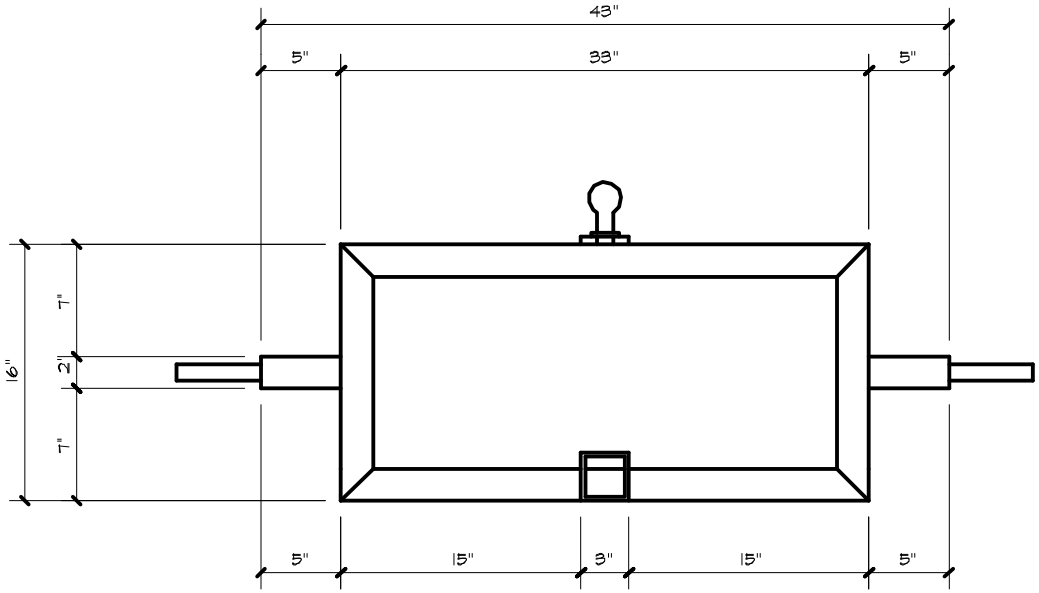

5TH WHEEL FRONT VIEW

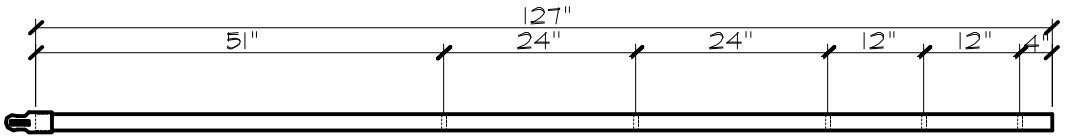

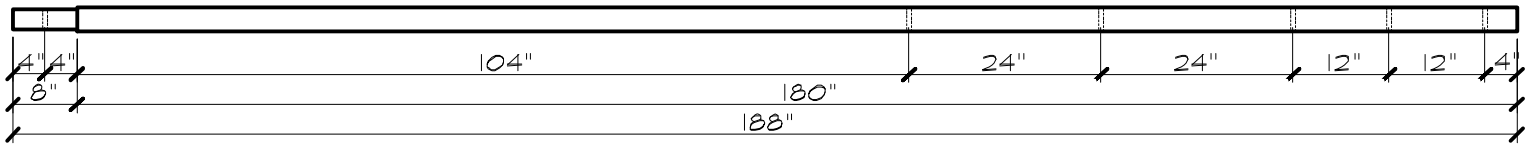

TRAILER EXTENSIONS